Laboratory 7

DC Motor Driver, Matrix Keypad and Liquid Crystal Display (LCD)

Purpose

To introduce the L293D quad channel push-pull driver chip for bi-direction DC motor control

Introduction

DC Motor Driver

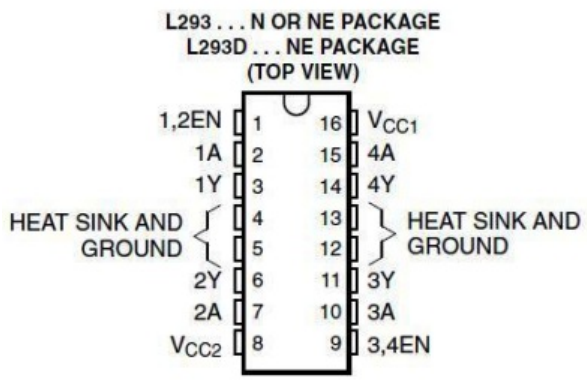

FUNCTION TABLE
(each driver)

INPUTS†		OUTPUT
A	EN	Y
H	H	H
L	H	L
X	L	Z

H = high level, L = low level, X = irrelevant, Z = high impedance (off)

† In the thermal shutdown mode, the output is in the high-impedance state, regardless of the input levels.

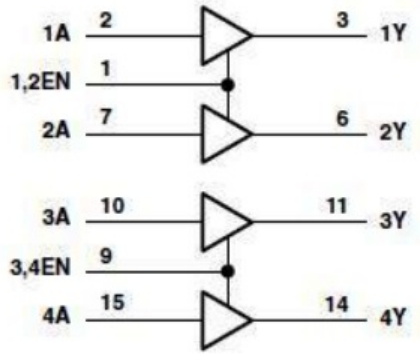

Logic Diagram

Figure 7.1 Datasheet of the L293D

The L293D (see Figure 7.1) is quadruple high-current half-H drives and it is designed to provide bidirectional drive currents of up to 600mA at voltages from 4.5V to 36V. The L293D is designed to drive inductive loads such as relays, solenoids, DC and bipolar stepping motors. The L293D needs +5 V (VCC1) to operate and VCC2, where VS must be between 4.5V and 36 V (We will use VCC2 =+12 V). The channels are enabled by applying +5 V to the pin 1 (1,2EN). If a logic high is applied to pin 2 (1A), pin 3(1Y) will go high (to about 1.4 V lower than VCC2). If a logic

low is applied to pin 2 (1A), pin 3 (1Y) will go low (to about 1.2 V above ground). Pins 7 (2A) and 6(2Y) operate in like fashion.

The pin 1 (1,2EN) of L293D is the enable input for the channels 1 and 2. When pin1 (1,2EN) is taken to logic high, the pair of channels is “enabled,” meaning that they are made operational. When pin1 is taken to logic low, the two channels are “disabled,” which means that the outputs effectively disconnected from the circuit and in the high-impedance state. With the proper data inputs, each pair of drivers forms a full-H (or bridge) reversible drive suitable for solenoid or motor applications.

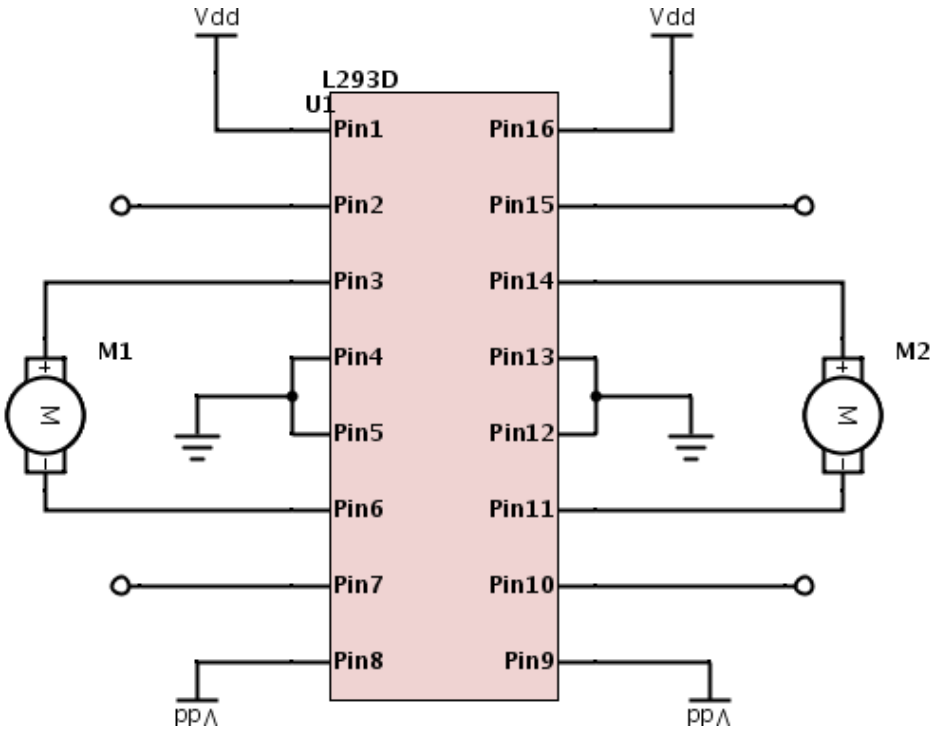

Figure 7.2

Components

(1) OEM Basic Stamp 2 microcontroller
(3) 4.7kΩ resistors
(4) 1kΩ resistors
(1) Serial LCD
(1) DC motor
(1) L293D
(1) Matrix Keypad
(3) SPDT switches or NO buttons

Procedure

DC Motor Driver:

1. Connect the Basic Stamp 2SX to the L293D, the DC Motor and the tact switches as shown in Figure 7.3. Set VCC2 =+12 V.

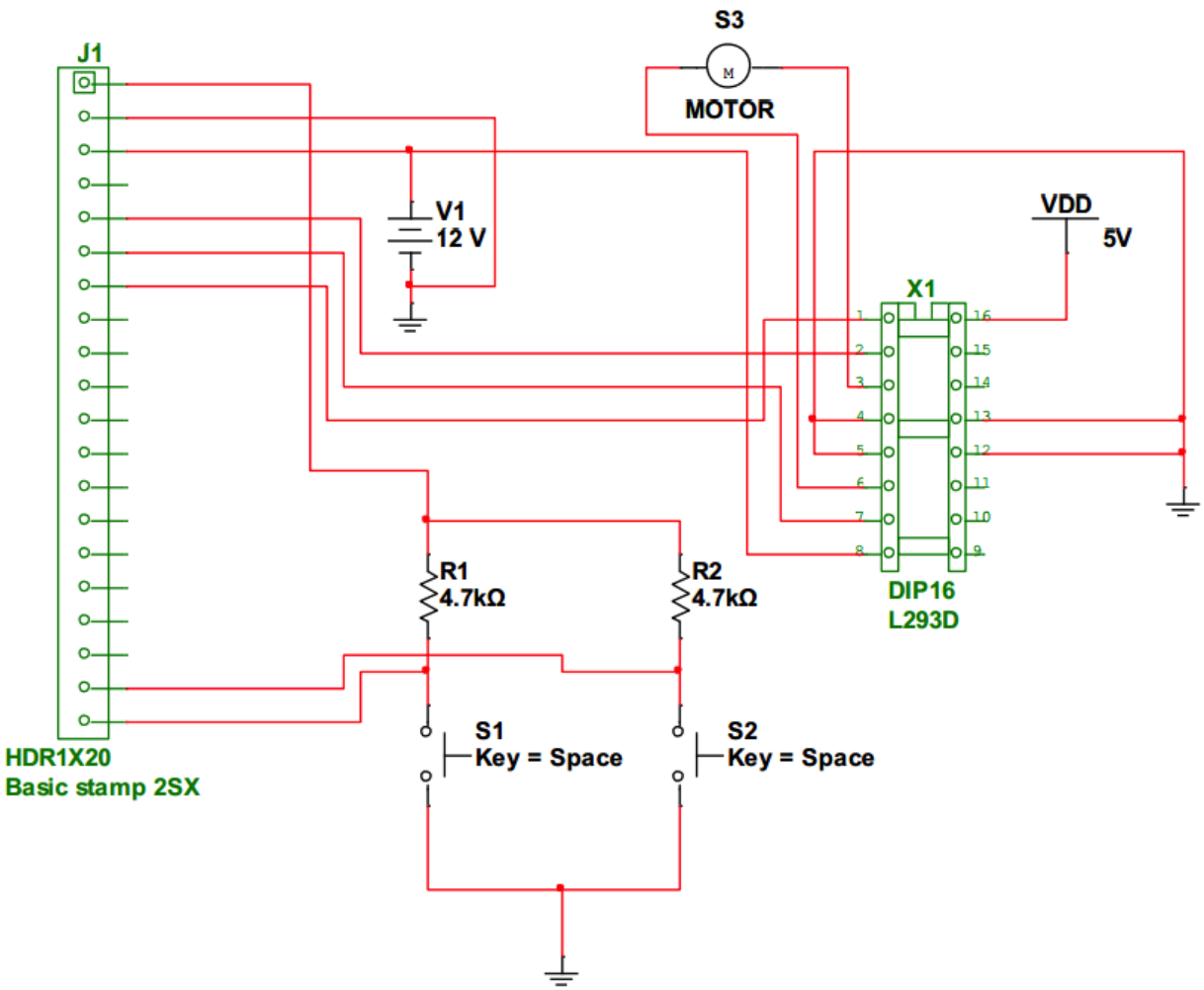

Figure 7.3 Connections to the Basic Stamp 2, the L293D and the tact switches.

2. Design a simple reset switch circuit and connect a reset switch to the RES pin of your Basic Stamp 2SX.

3. Test the circuit shown in Figure 7.3 by entering and running the following program:

```
' {$STAMP BS2sx}
' {$PBASIC 2.5}
' DC Motor Driver
' Put you name here
```

```
' Put the date here

MAX_DUTY      CON 253
MIN_DUTY      CON 50
DUTY          VAR Byte
CYCLES                VAR Byte

DIRS=$00FF
DIRH=$0000
DUTY = 100
CYCLES = 250

DIR:
        OUT1=1
        OUT0=0

DO
        BRANCH (IND>>2), [Emergency, FASTER, SLOWER, SAME]
LOOP

SAME:
         DEBUG "SAME", CR
         DEBUG ? DUTY
         PWM 2, DUTY, CYCLES
 RETURN

FASTER:
        DUTY=DUTY+2
        IF DUTY<=MAX_DUTY THEN SKIP_HI_LIM
        DUTY = MAX_DUTY
        DEBUG "MAX SPEED", CR
RETURN

SKIP_HI_LIM:
         DEBUG ?DUTY
        PWM 2, DUTY, CYCLES
RETURN

SLOWER:
         'DEBUG IBIN IND, CR
         DUTY=DUTY-2
         IF DUTY>MIN_DUTY THEN SKIP_LO_LIM
         DUTY = MIN_DUTY
         DEBUG "Min SPEED", CR
RETURN

SKIP_LO_LIM:
         DEBUG ?DUTY
         PWM 2, DUTY, CYCLES
RETURN

Emergency:
         LOW 2
```

```
        DEBUG "Restart the Basic Stamp"
RETURN
```

4. To verify the behavior of the DC motor, enter the values and leave comments into the following table. High = +5V and Low = 0V.

OUT0 (P0)	OUT1(P1)	(P3)	(P14)	(P15)	Comment on the DC motor
		High	High	High	Rotate Clockwise
		High	High	High	Rotate Anticlockwise
Low	High	High	High	High	
Low	High	High			Increase Speed
Low	High	High			Decrease Speed
Low	High	Low	High	High	
High	High	High	High	High	
	Low	High	High	High	Stop

Table 1 DC Motor Controller

Table 1. DC Motor Controller